EMUGE FRANKEN

Made in Germany

Speedsynchro® Mini

EMUGE

Softsynchro® Technology with Transmission Gearing Particularly for Brother and FANUC Machines

Machining costs

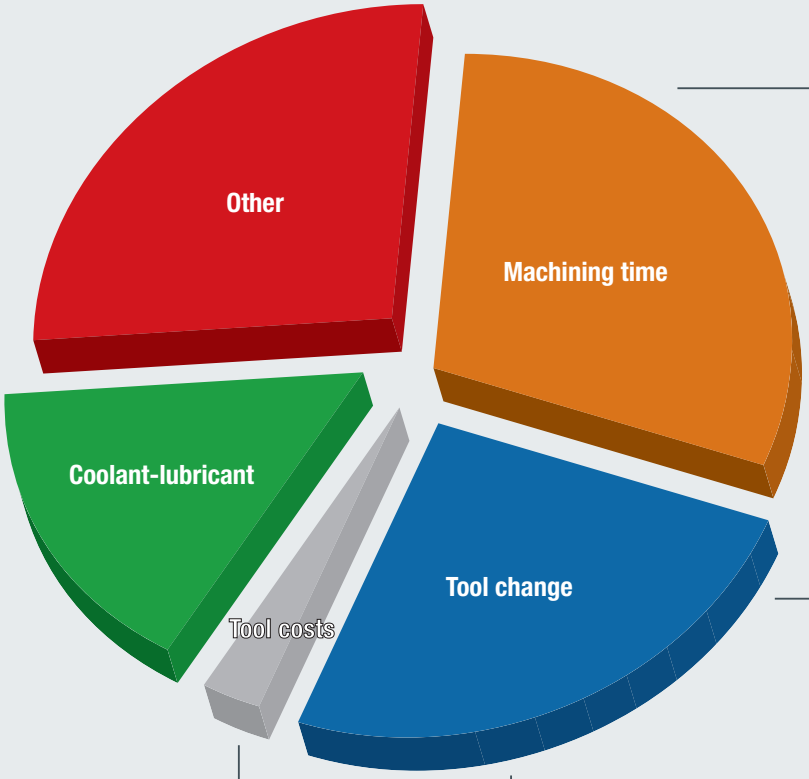

Cost-saving potential due to

Higher cutting speeds

In a synchronous thread production machine spindles do not achieve the programmed rotational speeds beyond a certain spindle speed. The transmission gearing of the Speedsynchro® Mini keeps up with the programmed speeds even with very dynamic synchronous spindles.

Easy tool setup

A simply adaptation of the CNC programme – reducing the spindle speed by the transmission factor 4.414 and increasing the feed per revolution – allows to determine the cycle time reduction directly on the component.

High changing speed

High changing speeds are possible thanks to the low weight (< 2 kg) and the compact design.

Longer tool life

The minimal length compensation function reduces the axial force on the tap.

Weitere Informationen zum Speedsynchro Mini erhalten Sie im Web

Further information about the Speedsynchro Mini is also available on the web

Solution to increase productivity

Transmission gearing

- Time savings up to 50%
- Very high energy savings
- Reduced spindle wear

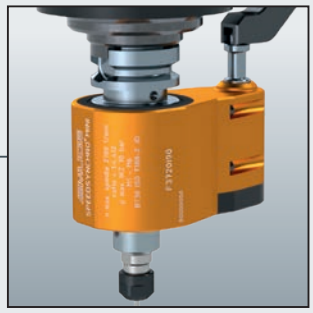

Thread production

- Simple programming as synchronous cycle
- Determining the time advantages through “simulation”

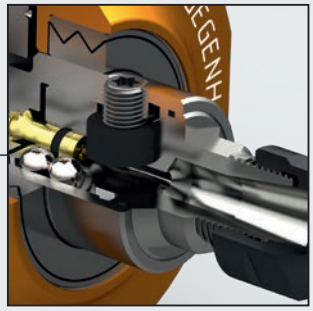

Minimal length compensation

- Longer tool life
- Reduced tool change times

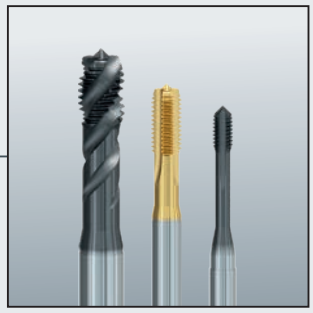

EMUGE threading tools

- Longer tool life
- Reduced tool change times

Near Field Communication (NFC)

- Contactless exchange of operating data between Speedsynchro® Mini and NFC-enabled smartphone

Internal transmission gearing

for achieving a high tool speed at a low spindle speed in order to reduce cycle time, to save energy and increase efficiency.

Transmission ratio 1 : 4.412

Softsynchro® technology

Separate axial transmission of power and torque compensates for arising synchronisation errors for longer tool life.

Rotational speed of threading tool 441%

Near Field Communication

NFC

Integrated NFC module stores operating data such as operation time, number of threads, battery status.

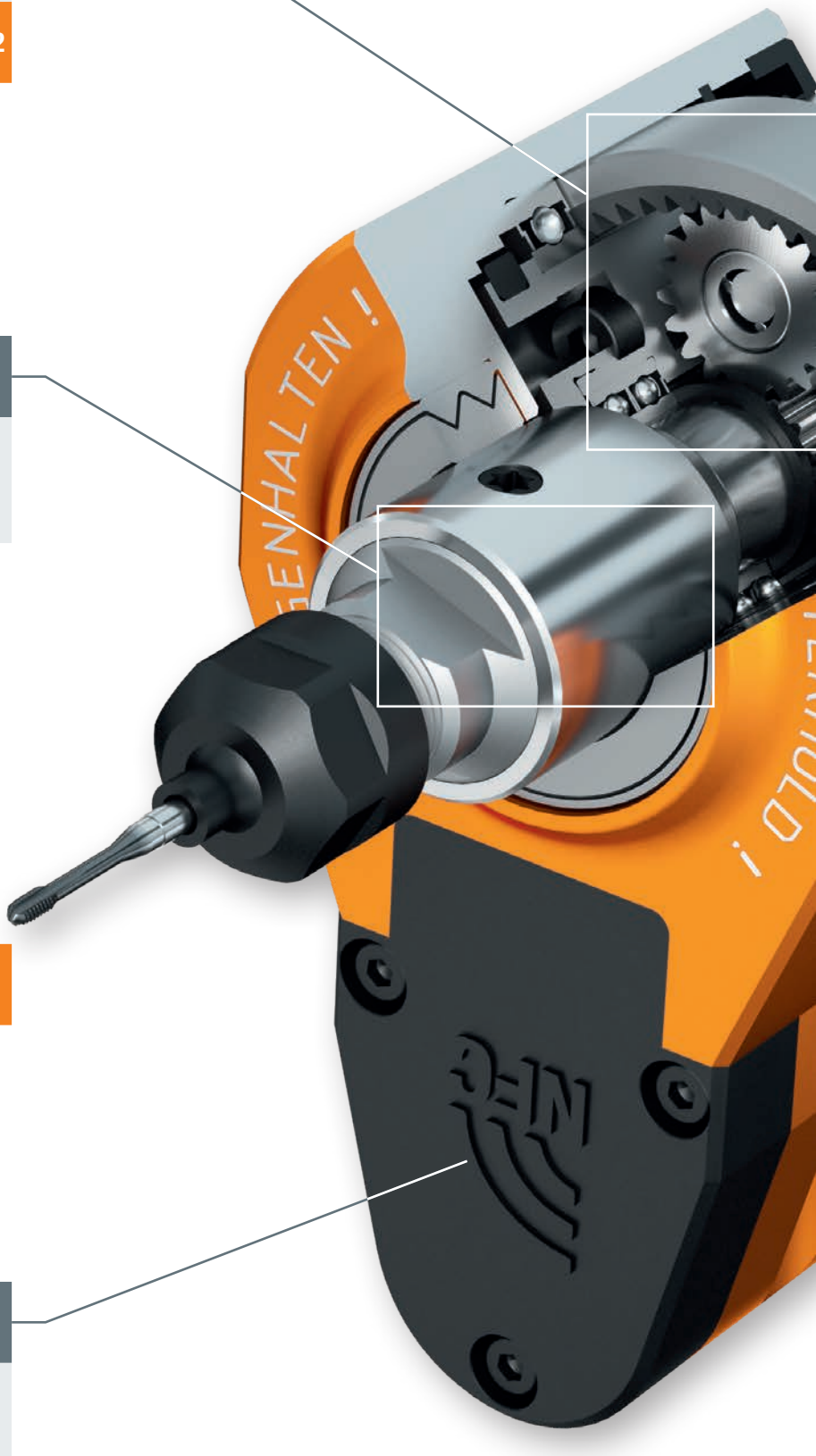

Rotational speed of machine spindle 100%

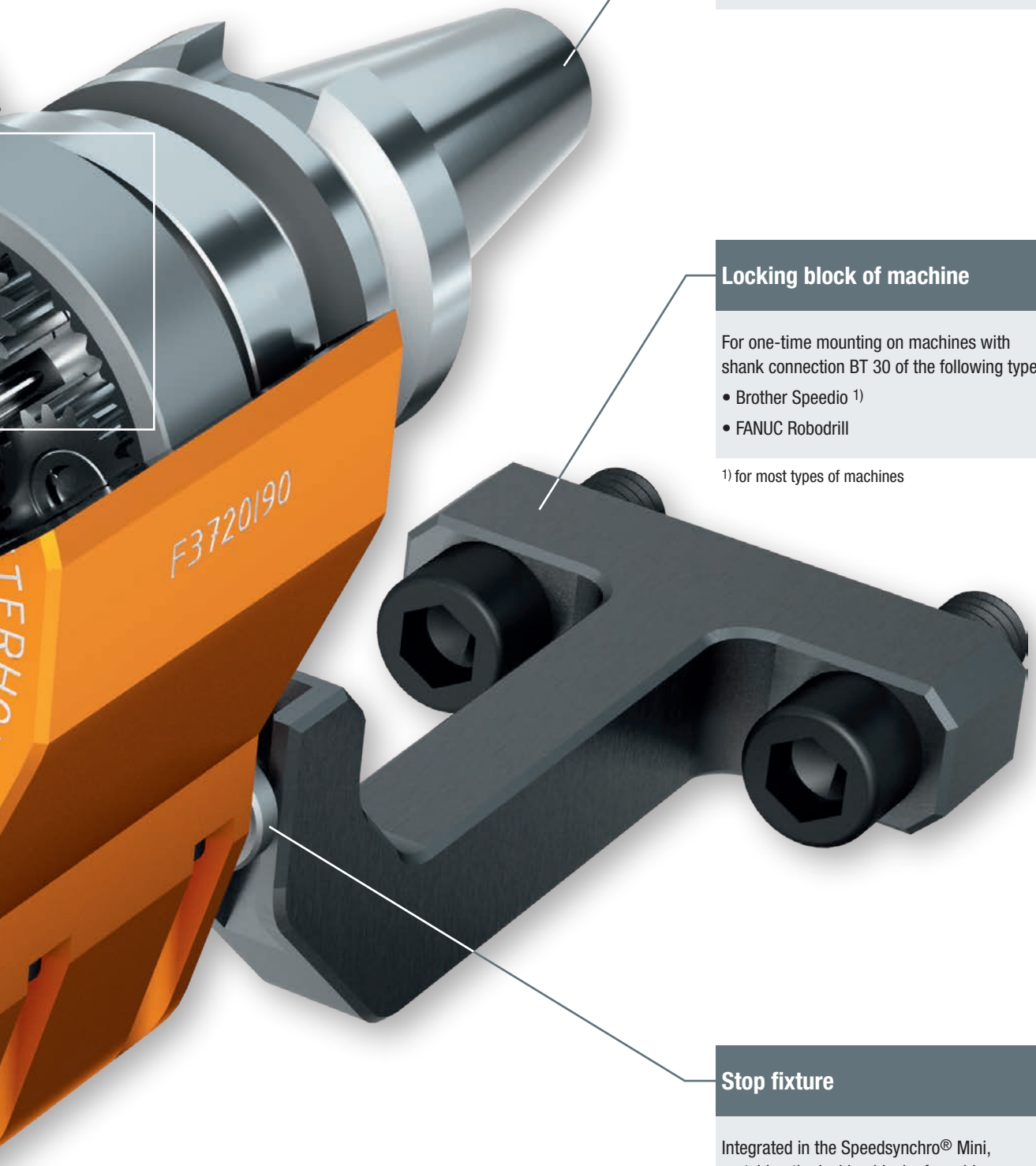

Shank

Permanently mounted taper shank BT 30 according to DIN ISO 7388-2 JD.

Locking block of machine

For one-time mounting on machines with shank connection BT 30 of the following types:

- Brother Speedio [1)]
- FANUC Robodrill

[1)] for most types of machines

Stop fixture

Integrated in the Speedsynchro® Mini, matching the locking block of machine.

Functionality

The Speedsynchro® Mini uses an integrated transmission gearing with a transmission ratio of 1 : 4.412 and combines it with the Softsynchro® minimal length compensation function.

The Speedsynchro® Mini was specially developed for machines with very dynamic synchronous spindles.

The transmission gearing allows:

- to machine threads in the unproblematic synchronous speed range
- a multiplication of the synchronous spindle speed
- synchronous thread machining of up to 12,000 rpm

Technical characteristics

• Cutting range:	M1 - M6
• Collet size:	ER11
• Transmission ratio:	1 : 4.412
• Max. spindle speed:	2,700 rpm
• Max. tool speed:	11,912 rpm
• Minimum length compensation:	± 0.5 mm
• Weight:	< 2 kg
• Internal coolant supply	

Advantage savings in cycle time

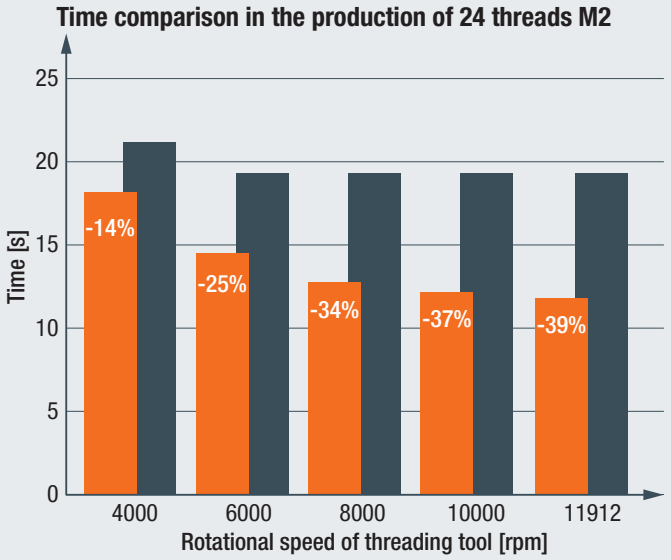

Reduction of thread machining cycles due to achieving the programmed cutting speeds with the integrated transmission gearing in “fast mode”

Advantage reduction of axial force on threading tool

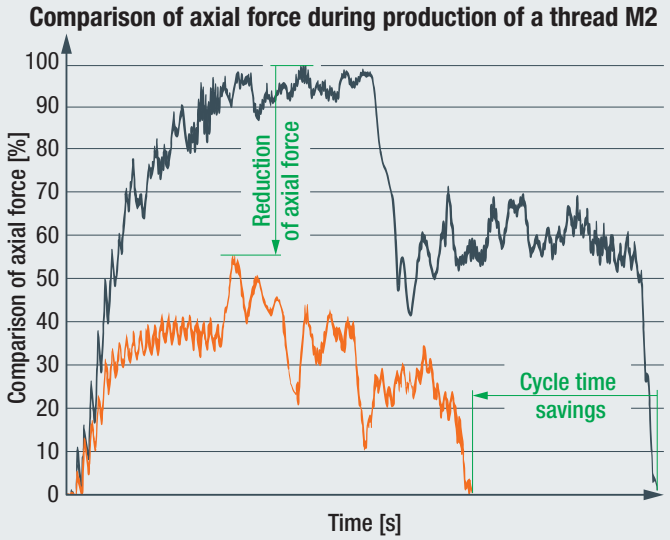

Synchro

Speedsynchro® Mini

Advantage energy savings

- In addition to the time savings due to the transmission gearing, the reduced speeds of the machine spindle result in energy savings compared to synchronous thread production
- The savings are relatively independent of the thread size and are mainly determined by the spindle speed

Advantage economic efficiency

The Speedsynchro® Mini enables time savings of up to 50% in thread production.

The amortisation of the additional holder costs occurs already after a short period of time.

- Reduction of thread production time
- Increase in component production
- Reduction of manufacturing costs
- Reduction of the production machines
- Reduction of spindle maintenance
- Energy saving thanks to short spindle acceleration and constantly low spindle speed

ROI – Calculate your savings

Speedsynchro® Mini

DIN ISO 7388-2 JD

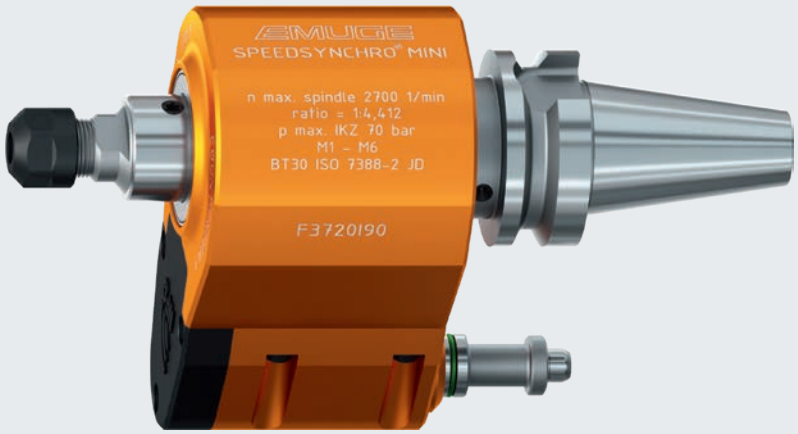

Internal coolant supply — IKZ

Coolant-lubricant pressure at the entry to the holder — p_{max} 70bar (1000psi)

Minimum length compensation — C T Soft

Tool adaptation by means of collets, type ER (GB)

Near Field Communication — NFC

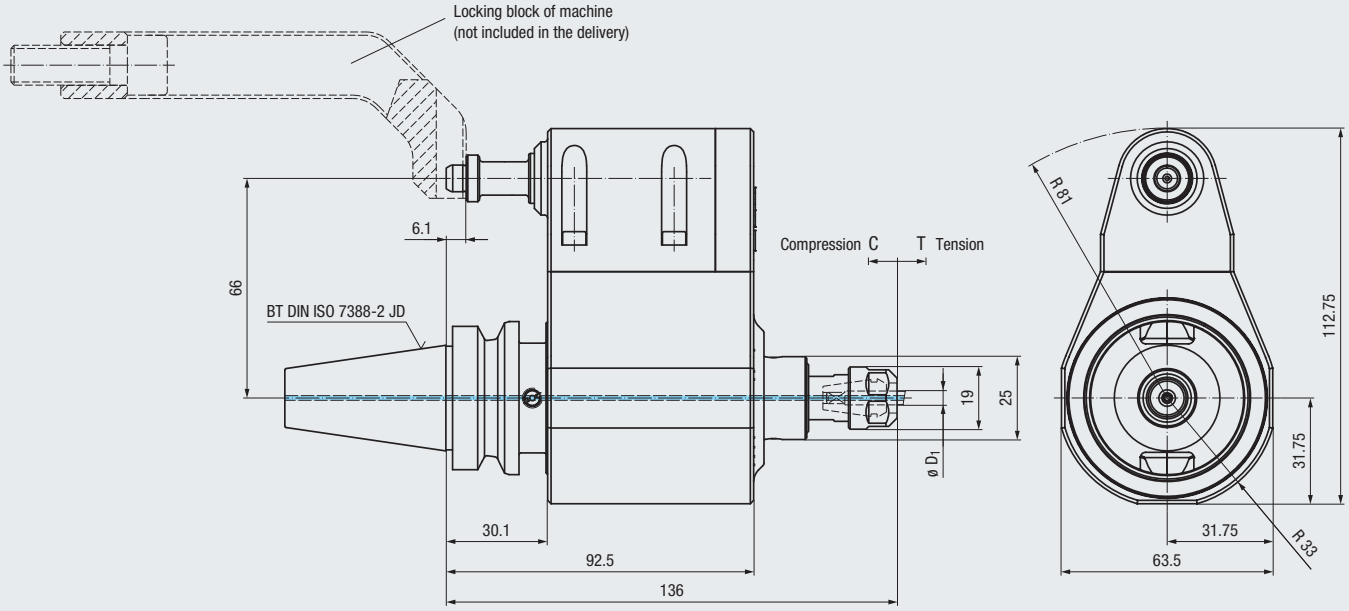

Type		ø D_1			Max. spindle speed	Transmission ratio	Shank connection	C	T	**Article no.**	
Speedsynchro® Mini	M1 - M6	2.5 - 6	ER 11 (GB)	Hi-Q/ERC 11	2700 rpm	1 : 4.412	BT 30 DIN ISO 7388-2 JD	0.5	0.5	**F3720I90**	●

Accessories

Locking block of machine for most **Brother Speedio** machines with shank connection BT 30 — **F10716446**

Locking block of machine for **FANUC Robodrill** machines with shank connection BT 30 — **F10716451**

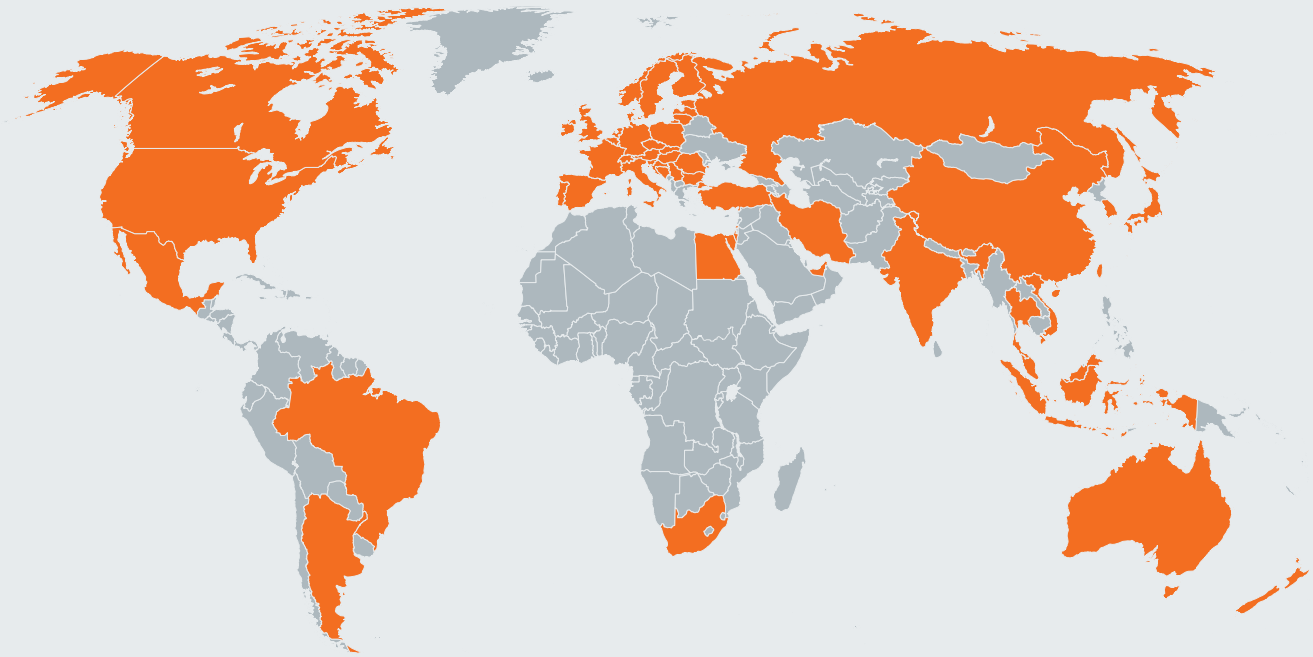

EMUGE-FRANKEN sales partners, please see www.emuge-franken.com/sales

ZP10147 . GB 10724911
8H 092022 Gu · Rev. A · Printed in Germany

EMUGE-Werk Richard Glimpel GmbH & Co. KG
Fabrik für Präzisionswerkzeuge

Nürnberger Straße 96-100
91207 Lauf
GERMANY

+49 9123 186-0
+49 9123 14313

FRANKEN GmbH & Co. KG
Fabrik für Präzisionswerkzeuge

Frankenstraße 7/9a
90607 Rückersdorf
GERMANY

+49 911 9575-5
+49 911 9575-327

info@emuge-franken.com www.emuge-franken.com